HALE TRAILER BRAKE & WHEEL

SALES | RENTALS | PARTS | SERVICE

Allentown, PA:	800-383-8894	Little Rock, AR:	833-424-8944
Baltimore, MD:	888-601-7500	Portland, ME:	800-325-4253
Concord, NC:	800-438-2250	Raleigh, NC	833-418-9777
Delmar, DE:	866-486-1400	Scranton, PA:	800-569-1400
Des Moines, IA:	888-673-5011	Springfield, MA:	800-854-5306
Elkton, MD:	800-544-7127	Voorhees, NJ:	866-315-0235
Jacksonville, FL:	800-828-3055	Walpole, MA:	800-854-5310

haletrailer.com | @haletrailer

800-232-6535 *FINANCING AVAILABLE

EAST A039330-A039335

VIN: 94140-94145

Q8019-1-00112A

ALUMINUM "BST II" PLATFORM TRAILER

LENGTH:	48' - 24" BEAM	**SUSPENSION:**	AAT30K/E2-L-LIFT (FRONT LIFT)
WIDTH:	102"		GALVANIZED HANGERS & SOFTCOAT PAINT
NOSE:	SQUARE + EXTRA ISO 7 WAY PLUG (1)(3)	**LOWERING KIT:**	AUTOMATIC
		AXLE TO AXLE:	121"
KING PIN SETTING:	30" W/ 5/16" STEEL-NO ACCESS HOLES	**AXLE TO REAR:**	30"
FLOOR:	KNURLED ALUMINUM	**LIFT / AXLE:**	N/A
	3 NAILERS	**SPACING:**	N/A
	INTEGRATED SIDE RAIL	**F.W. HEIGHT:**	49"
XMEMBER SPACING:	16"	**CONTROLS:**	FRAME SWITCH+ELEC CC WIRED TO BLACK ISO
COIL PACKAGE:	YES - CENTER	**AXLES:**	TP
SPOOLS:	DOUBLE		23,000 GAWR
POCKETS:	HD FRONT TO ACCEPT AERO BH-SEE DWG	**AUTO SLACKS:**	STD
ROPE HOOKS:	NONE	**BRAKES:**	16 1/2" X 7"
		ABS SYSTEM:	4S/2M
TIE DOWNS:	10PR J-HOOKS&2 STORAGE PIPES @ D/S LG		
MARKER LIGHTS:	LED - 9 PR EACH SIDE ON RAIL-EVENLY (7)	**HUBS:**	10 STUD LW STEEL
MID TURN SIGNAL:	LED- COMBO MARKER / MMTS BELOW RAIL	**DRUMS:**	LWBD
FLAT ◉ **ANGLE** ○		**WHEELS:**	8.25 X 22.5 4SP / 4 XP
LIGHT PANEL:	LED - 11 LIGHTS (OOOX ooo XOOO) (6)		
	1/2 STEPS ON REAR		
	FULL WIDTH BUMPER	**TIRES:**	11R 22.5 R196A BS
BULKHEAD:	NONE	**LANDING GEAR:**	JOST AX150 D/S CRANK
TYPE:			FORWARD BRACING (2)
HEIGHT:		**TIRE CARRIER:**	BRACKETS ONLY - P/S ACCESS MID TRAILER
RETURNS:		**TOOLBOX:** **QTY:**	ONE-AERO EXTREME 1/8"
MAT'L:		**SIZE:**	24" X 24" X 60"
ACCENT TAPE:	EAST BLACK	**LOCATION:**	D/S-BETWEEN AXLES
PAINT:	EAST BLACK +	**MAT'L:**	DOUBLE DOOR-SMOOTH ALUM
	SOFT COAT BLACK ON SUSPENSION		
WINCH TRACK:	STANDARD INTEGRATED RAIL	**MUDFLAPS:**	STD
		TYPE:	SILVER PLASTIC
LOCATION:	BOTH SIDES	**LOCATION:**	REAR
WINCHES:	12 - EA. STEEL SLIDING - D/S		
WINCH CLIPS:	12 - EA. SLIDING CLIPS - P/S		
STRAPS:	NONE		

REMARKS:

WEIGHT: +/-3%: 9700

1. EXTRA ISO 7 WAY PLUG WIRED TO JUNCTION BOX D/S INSIDE FRAME IN FRONT OF MOST FORWARD AXLE.
2. TRUCKLITE REGISTRATION HOLDER D/S @ LANDING GEAR
3. WIRING BACK 3" FROM INSIDE NOSE - SEE PICTURE
4. DUNNAGE RACK 8' 3" (090-30200-02) LOCATED D/S AHEAD OF SUSPENSION - PIC BELOW
5. PREP FOR FUTURE TIRE MAAX PRO INFLATION SYSTEM ON BOTH AXLES.
6. X=LED BACK UP LIGHTS WIRED TO AUXILIARY PLUG BROWN WIRE
7. MARKER LIGHTS TO BE LOW PROFILE MODEL 30 (30385) W/ RUBBER GROMMET

DISCLAIMER

Specifications are believed to be correct, but may contain errors and/or omissions. Photographs are the representative of the subject equipment but may not be identical.
Equipment availability, prices and specifications are subject to change without notice.

FRONT----------SIDE VIEW OF TRAILER ----------REAR

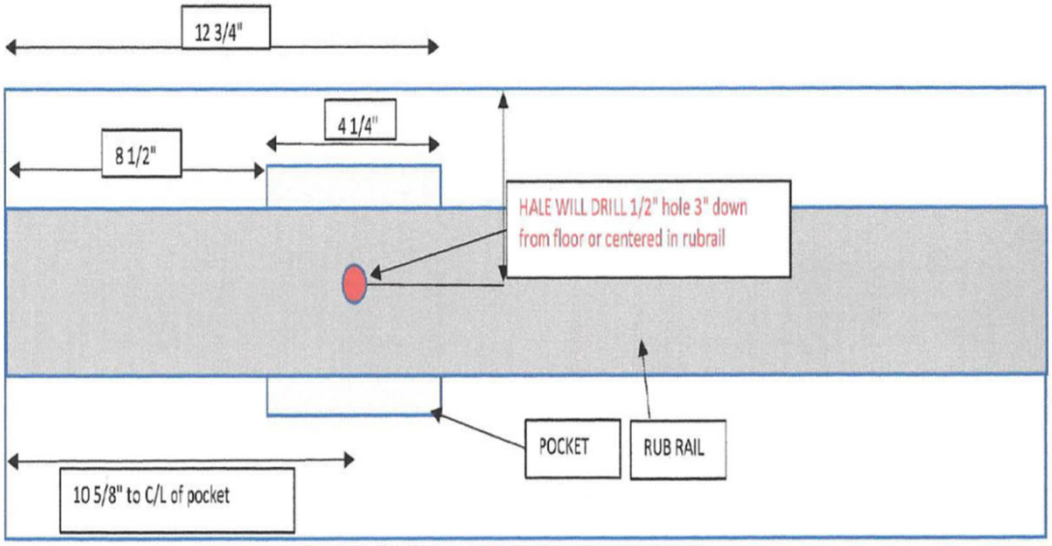

ELECTRICAL HARNESS TO BE BELOW OR ABOVE 1/2" HOLE

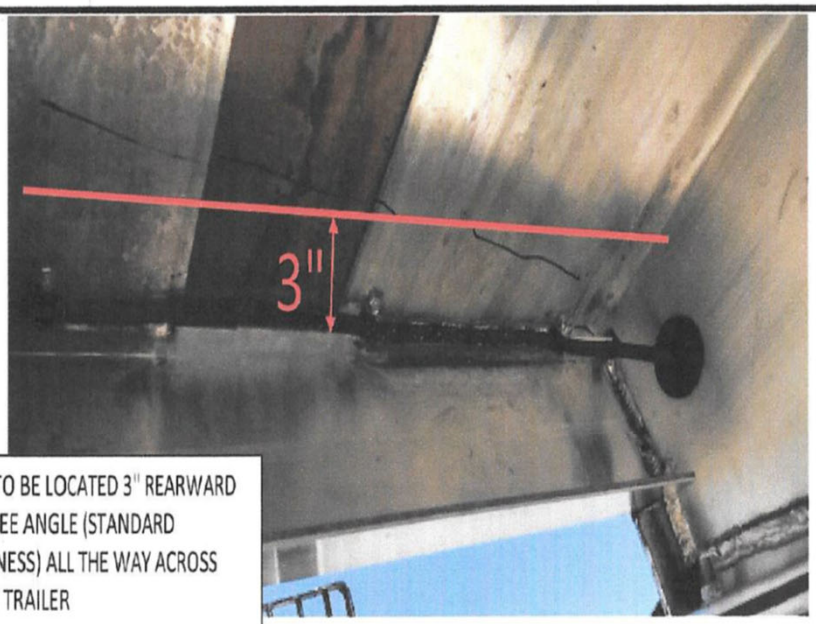

WIRING HARNESS TO BE LOCATED 3" REARWARD OF INSIDE 90 DEGREE ANGLE (STANDARD LOCATION OF HARNESS) ALL THE WAY ACROSS THE FRONT OF THE TRAILER

Hale Trailer
X [signature] 4/25/18
X

SIZE	DRAWING NO.	SHEET	REV
A	0610-4810210-2	1 OF 1	A

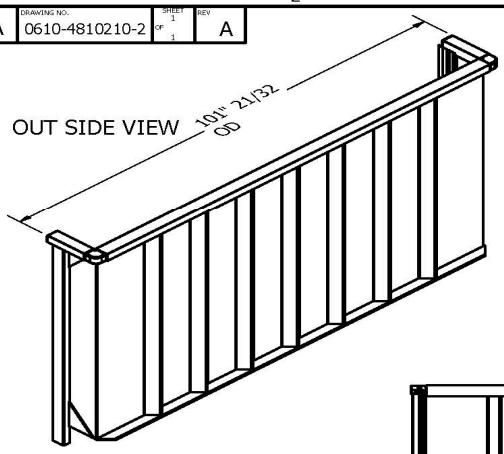

NOTES:
1. DO NOT SCALE DRAWING.
2. REMOVE ALL BURRS AND SHARP EDGES.
3. INDUSTRY STANDARDS AND PRACTICES MUST BE APPLIED IN FABRICATION OF PARTS.
4. PART TO BE FREE FROM SURFACE IMPERFECTIONS OTHER THAN SURFACE FINISH REQUIREMENTS.
5. CRITICAL DIMENSIONS ARE INDICATED BY: ●
6. THIS DRAWING WAS ORIGINATED BY AND IS THE EXCLUSIVE PROPERTY OF AERO INDUSTRIES, INC. AND/OR ITS OWNER. IT IS NOT AN AUTHORIZATION OR LICENSE TO MAKE THIS CONSTRUCION OR TO FURNISH THIS INFORMATION TO OTHER PARTIES.

INSIDE VIEW

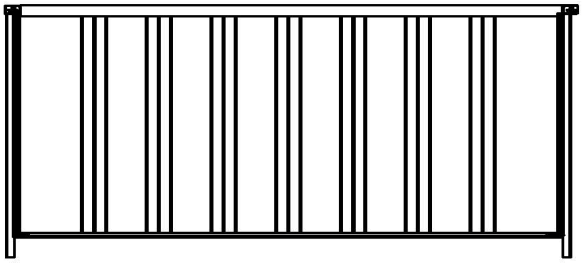

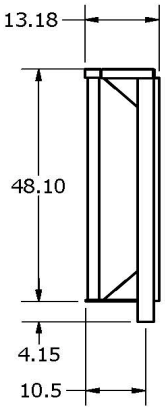

97.375 IN SIDE LEG
TO IN SIDE LEG

ITEM	PART NUMBER	DESCRIPTION	QTY
7	0611-960125	LEG ASSY BULKHEAD ALUM P.S	1
6	0611-960126	LEG ASSY BULKHEAD ALUM D.S	1
5	0611-860132	GUSSET BULKHEAD DOT	4
4	TOP RAIL ASSY 102W		1
3	BOTTOM RAIL ASSY 102W		1
2	860159		1

REV	DESCRIPTION	BY	DATE
REVISIONS			

P:\INVENTOR 2012\0610\0610-4810210-2.idw

TOLERANCES
UNLESS OTHERWISE SPECIFIED
DIMENSIONS IN INCHES
x/x = ± 1/16
.x = ± .031
.xx = ± .020
.xxx = ± .010
.xxxx = ± .005
ANGLE = ± 1/2°
SURFACE = 125

MATERIAL NOTE

USED ON

MATERIAL FINISH

Aero

TITLE: BULKHEAD ALUM 48"x102" 10" WRAP

SCALE	DRAWN BY	APPROVED BY	DATE
1:1	MJB		5/29/2017

SIZE	DRAWING NO.	SHEET	REV
A	0610-4810210-2	1 OF 1	A

